VELVET FROZEN

USER INSTRUCTIONS

N° DOC. UM000346
REV. A - 08.04.19

INDEX

CAP. N° N° PAG.

/ INDEX pag.2

/ SAFETY ADVICE pag.3

1 INTRODUCTION pag.5

2 CE MARKING pag.6

3-4 RESPONSABILITY, VALIDITY AND COPYRIGHT pag.8

5 INTENDED USE pag.9

6 HANDLING AND STORAGE pag.10

7 AMBIENT CONDITIONS FOR INSTALLATION pag.12

8 INSTALLATION pag.13

9 FIRST START-UP pag.14

10 USE OF THE CABINET pag.15

11 CLEANING pag.17

12 MAINTENANCE pag.20

13 DISPOSAL pag.22

SAFETY ADVICE

ENSURE THAT AIR SLOTS ON THE CABINET ENCLOSURE ARE FREE FROM OBSTRUCTION.

DO NOT USE SCRAPE FROST OFF USING TOOLS OTHER THAN THOSE RECOMMENDED BY THE MANUFACTURER.

DO NOT USE ANY ELECTRICAL APPLIANCES INSIDE THE STORAGE COMPARTMENTS FOR THE FOOD FROZEN BY THE EQUIPMENT, UNLESS RECOMMENDED BY THE MANUFACTURER.

DO NOT STORE EXPLOSIVE SUBSTANCES SUCH AS PRESSURIZED FLAMMABLE PROPELLANT CONTAINERS IN THE REFRIGERATED CABINET.

KEEPING PHARMACEUTICALS, GLASS BOTTLES OR FLASKS IN THE CABINET IS STRICTLY FORBIDDEN AS THEY COULD GET BROKEN AND ENTAIL A SAFETY HAZARD.

ONLY QUALIFIED PERSONNEL CAN REMOVE PANELS OR GUARDS, AND ESPECIALLY THE ELECTRIC BOARD COVER, WHEN THIS REQUIRES THE USE OF TOOLS.

DO NOT EXPOSE THE EQUIPMENT TO ATMOSPHERIC AGENTS.

DO NOT USE DIRECT OR INDIRECT WATER JETS ON THE CABINET. DO NOT TOUCH THE EQUIPMENT WITH DAMP OR WET HANDS OR FEET; DO NOT USE IT WHILE BAREFOOT.

THE EQUIPMENT IS NOT AIMED TO BE USED BY PERSONS HAVING IMPAIRED PHYSICAL, SENSORIAL OR MENTAL FACULTIES (CHILDREN INCLUDED), OR BY PERSONS HAVING POOR EXPERIENCE OR KNOWLEDGE, UNLESS THEY ARE SUPPORTED BY SOMEBODY IN CHARGE OF THEIR SAFETY OR BY THE INSTRUCTIONS FOR THE USE OF THE EQUIPMENT. SURVEILLANCE MUST BE EXERCISED ON CHILDREN IN ORDER FOR THEM NOT TO PLAY WITH THE EQUIPMENT.

THE POWER CORDS MUST BE PROPERLY SPREAD OUT, SAFE FROM SHOCKS AND FAR FROM LIQUIDS, WATER AND HEAT SOURCES, AND IN PERFECT CONDITION. THE USE OF ADAPTOR PLUGS IS FORBIDDEN.

ENSURE THAT THE POWER SUPPLY VOLTAGE MEETS THE DETAILS ON THE RATING PLATE OF THE CABINET. THE CABINET MUST BE PROPERLY CONNECTED TO THE EARTHING SYSTEM.

JOBS INVOLVING THE COOLING CYCLE OR THE WIRING SYSTEM MAY ONLY BE PERFORMED BY QUALIFIED PERSONNEL. DISCONNECT THE CABINET'S PLUG FROM THE MAINS OUTLET BEFORE ANY JOBS.

RNAL WALLS OF THE EQUIPMENT AS THIS COULS COMPROMISE CABINET PERFORMANCE.

IN ORDER TO REDUCE FLAMMABILITY-RELATED RISKS, THIS CABINET MAY ONLY BE INSTALLED BY SUITABLY QUALIFIED PERSONNEL.

UNDER UNFAVORABLE CONDITIONS, LIGHTNING STRIKES ON THE SUPPLY NETWORK OR NEAR THE INSTALLATION, MAY CAUSE THE LAMPS TO GO OFF AND REQUIRE SERVICING

ANY OTHER USE NOT EXPLICITLY MENTIONED IN THIS BOOKLET MUST BE CONSIDERED AS HAZARDOUS. THE MANUFACTURER DISCLAIMS ALL LIABILITY FOR DAMAGE RESULTING FROM IMPROPER, INCORRECT OR UNREASONABLE USE.

1. INTRODUCTION

1.1 CLAUSES

THIS INSTRUCTION MANUAL IS AN INTEGRAL PART OF THE PRODUCT AND MUST BE KEPT UNTIL THE PRODUCT IS DISMANTLED.

THE MANUAL MUST BE KEPT BY A PERSON RESPONSIBLE FOR IT, IN A PLACE THAT IS SUITABLE AND KNOWN TO ALL INDIVIDUALS CONCERNED, SO THAT IT IS ALWAYS AVAILABLE FOR CONSULTATION.

1.2 CONTENT OF THE MANUAL

This manual contains information on the installation, use and maintenance of the product.
It also contains information on the technical features and safe use of the product.

1.3 PURPOSE OF THE MANUAL AND INDIVIDUALS INVOLVED

The information contained in the instruction manual indicates the use of the product and its technical features in addition to directions regarding its handling, installation, assembly, adjustment and use. It also contains information on the instructions to give to the operators put in charge of its use, as regards maintenance work, and to protect their safety.

This instruction manual has been written for the:

OPERATOR: qualified person, in charge of the operation, adjustment, cleaning and routine maintenance of the display cabinet.

SPECIALIST TECHNICIAN: person in possession of the technical training and experience necessary to make him aware of the risks he is exposed to in carrying out work and make him capable of adopting the necessary measures to cause the least harm to self and others. He is authorized to carry out extraordinary maintenance repairs, replacements and overhauling.

The title of every section specifies the person the chapter caters for (OPERATOR or SPECIALIST TECHNICIAN). If there is no specification the chapter refers to both people listed above.

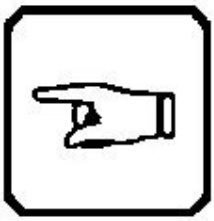

1.4 MANUAL LAYOUT AND LEGEND

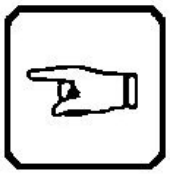

IMPORTANT; This symbol is used to signal advice, rules, cross-references and communications which any person involved in the use of the product (each according to his responsibility) must bear in mind during all stages of the product life (installation, use, maintenance, dismantling, etc.).

CAUTION; This symbol is used in the safety messages of the manual to signal hazards which, if disregarded, could cause small or moderate injuries or damage. The message can also be used to signal the conditions which can damage the product.

HAZARD; This symbol is used in the safety messages of the manual, to indicate behaviour which must be avoided at all costs during use of the equipment, maintenance work or when there are potentially hazardous situations and the probability of causing serious injuries or death.

TO AVOID ACCIDENTS, read, understand and observe all the precautions and warnings contained in this manual and those shown on the labels applied to the product.

2. CE MARKING

This product is accompanied by documentation that certifies its conformity with the directive in force and which shows its essential features.

In particular, it provides:

1. Product details (serial number, date, product code)
2. Name of manufacturer
3. Electrical rating (Voltage, frequency, amperage, wattage)
4. Power – amperage when defrosting (if defrosting is electric)
5. Power of auxiliary heating systems.
6. Lamp wattage
7. Refrigerant fluid number and mass
8. Climate class, temperature and relative humidity of the reference climate class.
9. Insulation blowing gas
10. CE marking and any other marks

The plate must remain unchanged over time; it shows the details to provide to COSTAN if the need for assistance arises.

The A weighted sound pressure level emitted by the meuble is less than 70dB (A).
The cabinet does not generate any harmful vibration.

3. RESPONSABILITY

THE INSTRUCITON MANUAL IS AN INTEGRAL PART OF THE PRODUCT AND MUST BE KEPT UNTIL THE END OF ITS LIFE.

The manufacturer declines any responsibility deriving from:

- improper, incorrect or unreasonable use of the product.
- use which is contrary to the national regulations in force.
- incorrect installation of the product.
- incorrect power supply.
- poor maintenance.
- unauthorized modifications or interventions.
- use of spare parts and products which are not original or not specific for the model.
- failure to observe the instructions contained in this manual.

4. VALIDITY AND COPYRIGHT

4.1 GENERAL INFORMATION

This use and maintenance manual, including all the attachments, is the only documentation provided with the equipment and accompanies it for the entire time of its operation.
If lost or damaged, the replacement documentation must be requested directly from COSTAN.

4.2 VALIDITY OF THE MANUAL

This manual reflects the technical status and technology used to construct the equipment, valid at the moment in which it is marketed; it cannot be considered inadequate or obsolete if it is subsequently updated according to new experiences.

4.3 RIGHT OVER THE MANUAL

COSTAN reserves the right to update its production and, consequently, the applicable use and maintenance manual. It is under no obligation to advise the Customer of the modifications made.

4.4 COPYRIGHT

This manual is the exclusive property of COSTAN. Handing this manual over to third parties must be authorized by COSTAN’s management team.
It is strictly prohibited to copy, reproduce with any medium, even partially, drawings and documents contained in this manual.
Any violation will be prosecuted according to the law and entitles to compensation for damages according to trade regulations provisions.

5. INTENDED USE (OPERATOR)

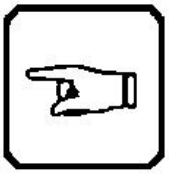

The product is intended to be used by qualified staff, i.e. staff who has been instructed and trained by the employer to use the product and on the risks which its use can cause.
Read the manual attentively before use and instruct the operator to use the equipment according to the instructions set out in the manual.
The content of the manual is also valid for all staff in charge of transport, installation, maintenance and dismantling of the product, each according to their responsibility.

The product must be used exclusively for the purpose it was designed for, as indicated in the manual.

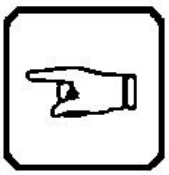

The Cabinet is suited exclusively to displaying frozen food.
The Cabinet is NOT suitable for lowering the temperature of the product but only for maintaining it.
The goods introduced in the cabinet MUST already be at their preservation temperature.
It is absolutely forbidden to display pharmaceuticals.

During normal use of the cabinet the front glazing must remain closed; it can only be fully opened during maintenance or cleaning activities. Intermediate positions are prohibited.

It is prohibited to remove any guard or panel if a tool is required to do so.

It is forbidden to tamper with or alter the product.

Any other use which is not specifically indicated in the manual is considered hazardous and COSTAN cannot be held responsible for any damage caused by improper and unreasonable use.

6. HANDLING AND STORAGE (SPECIALIST TECHNICIAN)

6.1 HANDLING

The loading and unloading operations must be performed by qualified staff, who will verify the exact weights and lifting points; they will use lifting equipment which is safe and with a suitable carrying capacity. There must be no individuals who are not involved in the operation close to the lifting points.

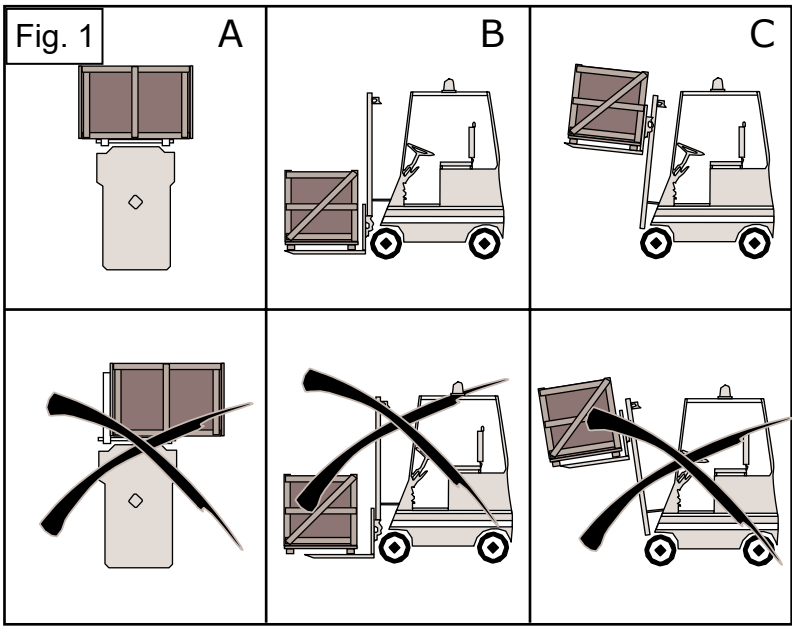

The package must be lifted by inserting the forks of the lift truck into the space between the legs of the pallet or crate. The weight of the equipment must be divided so that the centre of gravity of the package remains balanced (Fig.1-A). Do not tip the equipment over.

Before inserting the forks of the lift truck, verify that these cover the entire depth of the package (Fig. 1-B). If not, install appropriate extensions.

PROHIBITED LIFTING MEANS
Lifting means or equipment which do not respond to the safety requirements must not be used. These include:
- lifting capacity lower than the weight of the equipment;
- unsuitable construction features of the forklift truck (e.g. short forks);
- construction features altered by use;
- non-compliant ropes or cables;
- worn-out ropes or cables.

Any other handling procedure different to those described in this chapter are prohibited.

DON'T PUSH THE CABINET THROUGH THE UPRIGHTS

6.2 STORAGE

The equipment must be stored in a dry humidity-free environment.
It must be covered with a sheet before storage to protect it from dust or dirt.

The maximum storage temperature is 55°C.

7. AMBIENT CONDITIONS FOR INSTALLATION

The equipment must be installed in a closed environment, covered and safe from atmospheric agents.
The equipment must not be installed in areas containing explosive substances.

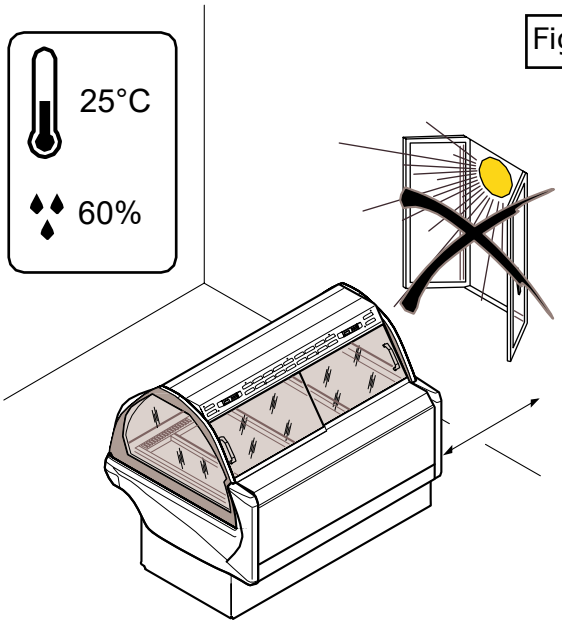

Fig. 2

Position the equipment far from draughts (fan-coil, fans, windows, air outlets).

Avoid exposing the equipment to direct sunlight, to concentrated light units or to sources of heat such as radiators, stoves or ovens.

Ensure there is sufficient air circulation on all sides of the cabinet.
It is absolutely forbidden to position objects around the counter which can in some way hinder the circulation of air over the condensing unit.

Failure to comply with the above requirements can, in addition to the fast deterioration of the materials composing the cabinet, cause poor operation of the cabinet, including:

- Higher energy consumption.
- Mist formation on the cold surfaces (glazing or countertop).
- Poor preservation of the foods of the counter and the risk of making the displayed goods deteriorate.

The ambient temperature must fall within the temperature limits established by the class of equipment (25 °C - 60% of humidity). If these limits are exceeded the performance of the equipment will be lower.

8. INSTALLATION (SPECIALIST TECHNICIAN)

INCORRECT INSTALLATION OF THE PRODUCT MAY CAUSE HARM TO PEOPLE OR DAMAGE TO PROPERTY. THE MANUFACTURER CANNOT BE HELD RESPONSIBLE FOR THE ABOVE HARM OR DAMAGE.

Any variation or modification to the installation conditions must be authorized in advance by Epta.
The operations described in this chapter must be performed by qualified staff.

To guarantee that the people in charge of installing the product can work in safe conditions, we strongly recommend attentively following the installation procedure described here. In any case, it is advisable to use suitable equipment or clothing: **safety shoes, protective gloves, spirit level.**
We also recommend using all the tools or protection equipment required by the regulation, or by the laws in force of the country where it is installed.

ELECTRICAL CONNECTIONS

The operations described in this chapter have been carried out by specialized personnel.

The systems must comply with the regulations that govern their construction, installation, use and maintenance. COSTAN declines any responsibility towards users and third parties for any damage that may be caused by malfunction or faults in the systems that power the product. It also declines any responsibility for damage which could be caused by the product by causes that are directly dependent on the malfunction of the electrical system.

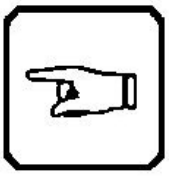

THIS EQUIPMENT IS CLASS I: CONNECTION TO A GROUNDING SYSTEM IS MANDATORY.
The manufacturer disclaims responsibility when this prescription is not complied with.

Upstream of the power socket install a thermal-magnetic circuit breaker in overvoltage category III, with capacity suitable for the power/current values defined in the technical data table.
Instruct the operator on the position of the switch so that it can be reached quickly in an emergency.

The customer is responsible for arranging a power supply line to the equipments connection point.
The size of the power supply line must be chosen according to the power absorbed by the equipment (see technical features table).
Verify that the power supply voltage and frequency reflect the values defined in the label or that they differentiate at the most by 5% the first and by 2% the second.

You are reminded that:
• It is obligatory to consult the wiring diagrams before making the connection.
• To comply with the abbreviations on the terminal block.
• To connect the protective conductor to the earthing terminal.
• The maximum section allowed for the power supply conductor is 4 mm²
• End sleeves can be used. Do not solder the conductors.
• Having secured the conductor to the terminal try to pull it to check if it is has been secu red correctly.

9. FIRST START-UP (OPERATOR)

9.1 FIRST CLEANING

Wear protective gloves to carry out the activities described in this chapter.

Clean the cabinet thoroughly before starting it up.
The instructions are specified in the “CLEANING” chapter.

9.2 START-UP

Switch ON the selector.
The cabinet starts the cooling cycle.

10. USE OF THE CABINET (OPERATOR)

10.1 PERFORMANCE

The Cabinet is suited exclusively to displaying frozen food.
The Cabinet is NOT suitable for lowering the temperature of the product but only for maintaining it.
The goods introduced in the cabinet MUST already be at their preservation temperature.
It is absolutely forbidden to display pharmaceuticals.

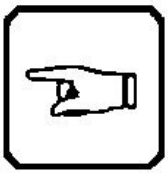

10.2 LOADING THE PRODUCT

Before placing the goods inside, check the DISPLAY SHELVES are positioned correctly.
The goods must be placed inside the cabinet only when the set temperature has been reached.
Caution: do not lay the goods directly on the painted display shelf if it is present.

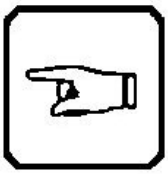

Check the consistency of the packaging before displaying packaged products containing liquids whose leakage could damage the cabinet. Otherwise, place the packaged product into a container.

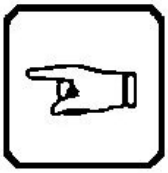

When loading the products and as long as they are inside the cabinet, pay maximum attention to respecting the maximum load limit defined by the labels on the side (see image below).

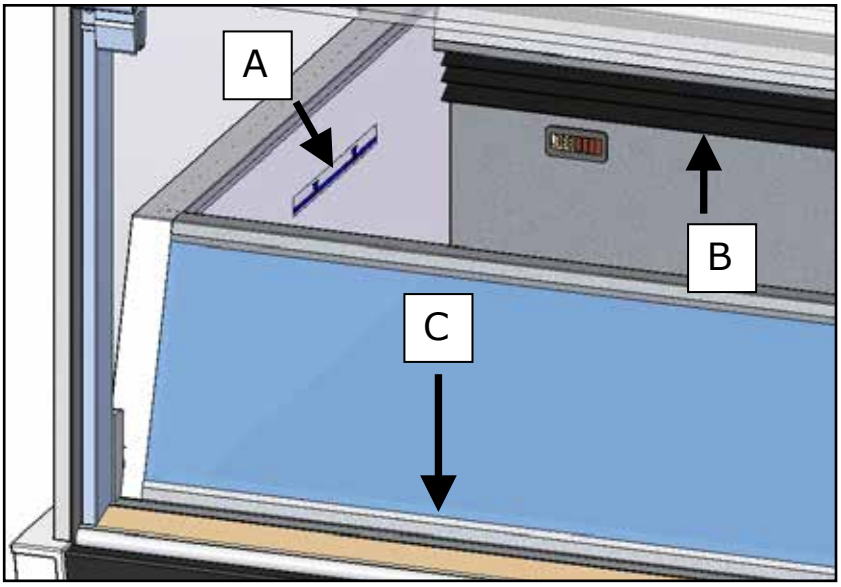

- Don't obstruct "B" slot of refrigerated air exit.
- Don't obstruct "C" slot of air intake.
- Don't obstruct refrigerated air flow; leave spaces between product.
- Don't exceed the admitted load for the display shelves (see technical sheet)

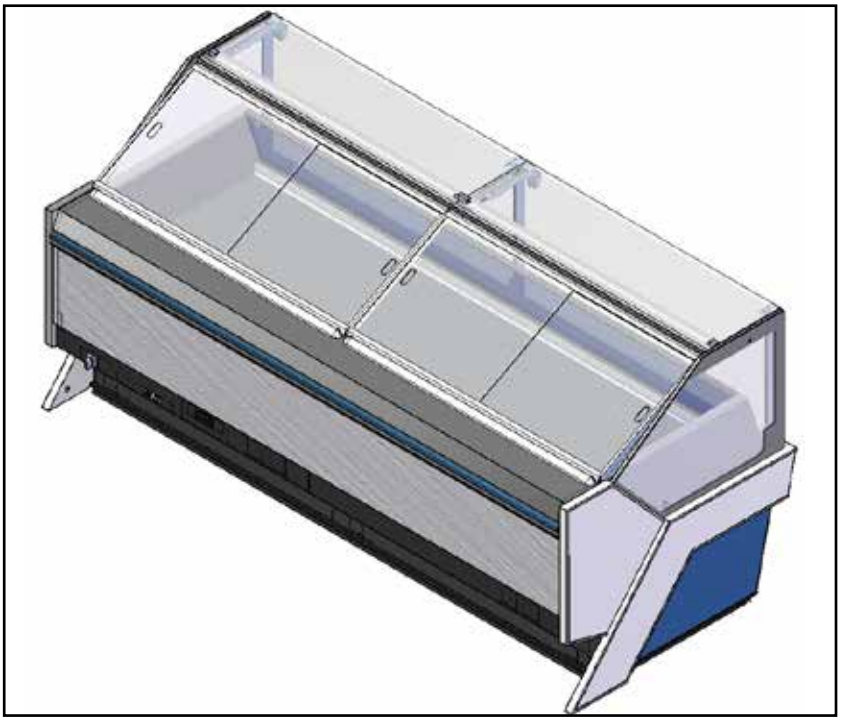

For correct operation of the display cabinet and to reduce energy consumption, the sliding doors must remain open for the least possible time.

If the sliding doors remain closed for an extended time, condensation may form in the top part of the unit.

To reduce this effect, it is recommended to open the sliding doors to release a little cold air and then close them again.

For correct operation of the display cabinet, it is recommended to defrost it COMPLETELY once a week.

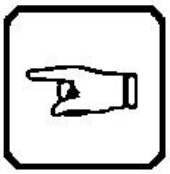

To facilitate loading/unloading the goods we recommend opening the front glass.
Do not obstruct air exit and entrance points.

10.3 ACCESSORIES

10.3.1 FRONT ANTI-MIST

The cabinets avail of an anti-condensation ventilation system for the front glass. If the excess humidity of the environment were to create problems like misting of the crystals, a warning light switch assembled on the control panel at the back of the cabinet, see figure below, allows to turn on an anti-mist heating element.

The heating element turns off automatically after an hour of operation (warning light switch off); if the need to use it persists, press the button again.

The time of operation of the heating element may be varied; in this case, contact your closest assistance centre who will make the change.

10.3.2 ILLUMINAZIONE

The Lighting is activated/deactivated by the switches positioned on the panel (fig. below)

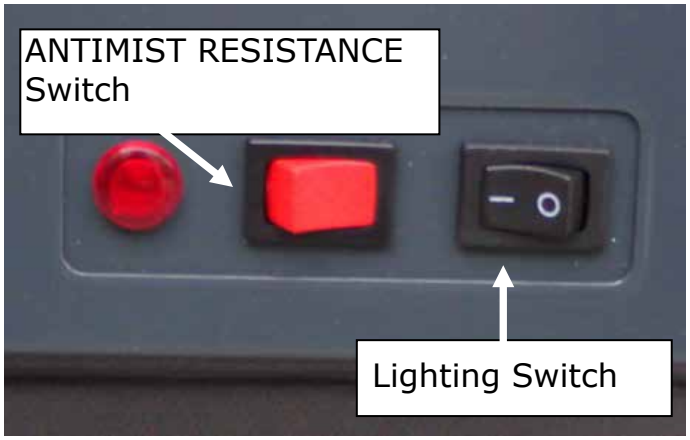

11. CLEANING

Before starting any cleaning operation switch off the power.

Wear protective gloves to carry out the activities described in this chapter.

It is totally forbidden to use water jets to clean the equipment.

11.1 ESTERNAL CLEANING

Clean all the external parts of the cabinet on a weekly basis, using exclusively warm water and soap or neutral detergent for domestic use diluted in water. Dry carefully using a soft cloth.
It is forbbiden to use flammable or abrasive products such as alcohol, acetone or solvents; Do not use detergents that contain non-ionic surfactants, lemon, or vinegar (acetic acid).

NEVER USE JETS OF WATER TO CLEAN THE CABINET. Use only glass cleaning products to clean glass surfaces. It is not recommended to use water because it can leave scale deposit on the glass surface.

CLEANING FRONT GLASS
To facilitate the cleaning operations of the front glass, it is always recommended to open it (lift it upwards, pull it outwards or to the side, depending on the model of the superstructure).
Be careful not to make force on the upper glass.

11.2 INTERNAL CLEANING

Clean all the internal parts of the cabinet on a monthly basis, following the same indications set out at the preceding point and **using exclusively a non-abrasive sponge. The maximum water temperature used for cleaning is 65°C.**

To clean the internal parts it is also necessary to follow the instructions below:
- De-energise the cabinet using the main disconnect switch on the wall.
- Empty the equipment completely putting the goods into other refrigerators.
- Wait for the equipment to be at ambient temperature.
- Extract the REMOVABLE DRAWER.

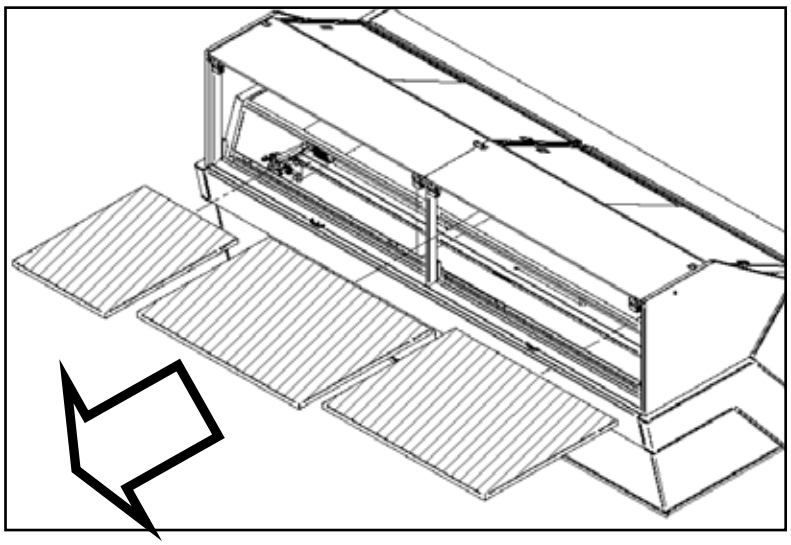

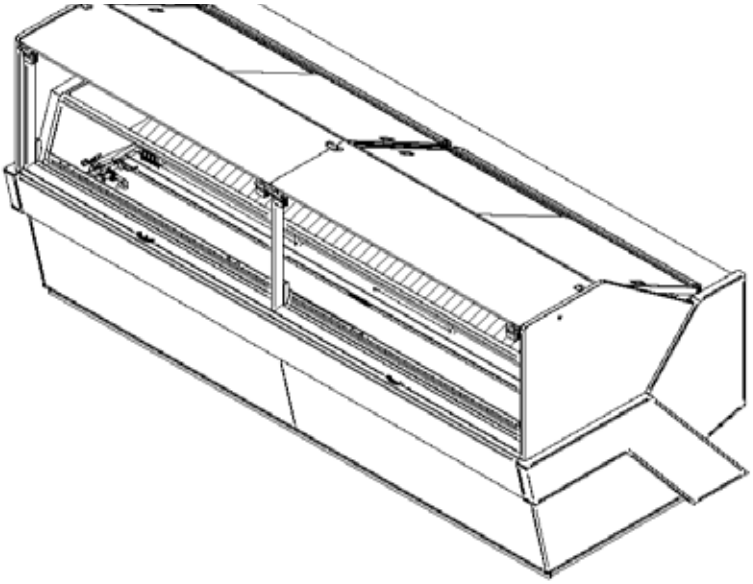

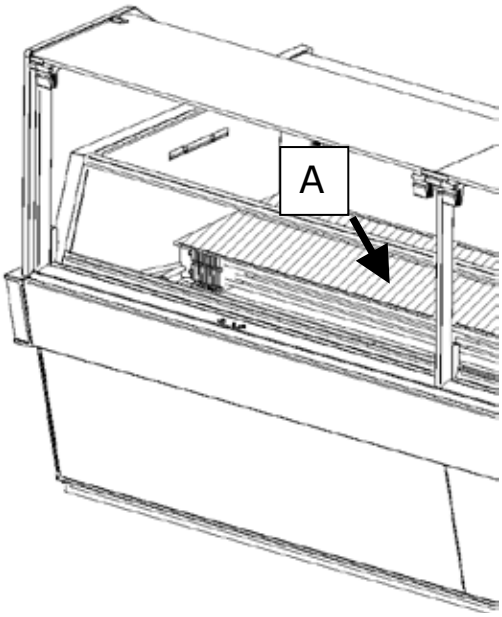

Remove the EVAPORATOR-COVER "A"

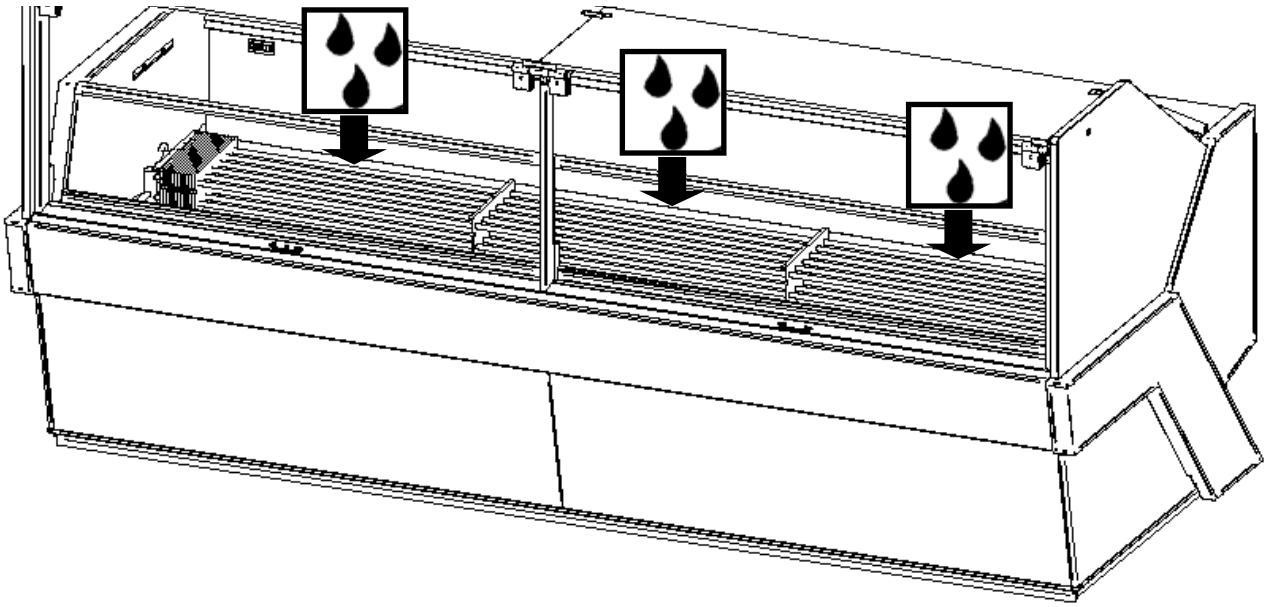

Be careful not to cut yourself with the thin evaporator fins or with edges or corners of adjacent sheets.
Wear protective devices suited to the purpose.

• Proceed with cleaning: to clean the area under the evaporator, with the aid of a suitable recipient, slowly pour some hot water taking care not to splash the surrounding components. The water must be poured from the rear side so that as it flows, it moves towards the drainage holes of the tub. If necessary, repeat the operation more times.
• To facilitate these operations and the collection of wash water, a drainage pipe has been provided to convey the water used for internal cleaning, directly to the outside of the unit.
• After attentively checking that the inside of the cabinet is completely dry, put the appliance back into operation by reconnecting power to the cabinet.
• After a few hours, load the product again.

12. MAINTENANCE (SPECIALIST TECHNICIAN)

The activities described in this chapter must be performed by a specialist technician.

Any maintenance work must be carried out while the equipment is disconnected from the power source.
Turn off power at the main switch on the wall.
Attention: before accessing the terminals, all the power circuits must be disconnected.

It is recommended to have a specialist technician perform an annual general check-up of the equipment (gas springs, refrigerator circuit...).

12.1 REPLACEMENT OF LED MODULES

Caution: to replace a LED lighting fixture it is obligatory to contact the cabinet dealer. Do not install alternative components.

12.2 WORK ON PROTECTION SWITCHES

To reactivate the protection switches, access the component chamber (see chapter "electrical connections") and turn the switch to ON.

Attention: before torning on again the switches remove the cause of the fault

Any other maintenance work which is not handled in the previous points must be carried out by service centres authorized by our dealers or by qualified staff.

12.3 MODIFICATION OF ELECTRONIC CONTROLLER SETTINGS

To modify the SETPOINT see the chapter "MODIFACTION OF SET POINT". The modification of the parameters, different to the SETPOINT, which modify the operation of the cabinet must be performed solely by the installer or by a qualified technician. The manuals of the electronic controllers are found at the links below, or they can be requested from the service department of EUROCRYOR:
http://food-retail.danfoss.com/products/electronic-controllers/evaporator-controllers/

AKCC550A	Unit	VLT HFC	VLT CO2 60b	AKCC550A	Unit	W/o electrical defrost	With electrical defrost
Set	°C	-18	-18	n11	°C	15	15
r01	°K	1	1	n12	°K	0	0
r02	°C	-10	-10	F04	°C	6	6
r03	°C	-25	-25	F05	flag	50	50
r04	flag	0	0	F06	min	0	0
r05	flag	0	0	F07	flag	5	5
r09	°K	0	0	t01	ore	100	100
r10	°K	0	0	t02	ore	0	0
r12	flag	1*NOTA	1*NOTA	t03	ore	0	0
r13	°K	0	0	t04	ore	0	0
r14	flag	1	1	t05	ore	0	0
r15	flag	0	0	t06	ore	0	0
r16	ore	0	0	t11	min	0	0
r17	min	0	0	t12	min	0	0
r21	°C	2	2	t13	min	0	0
r59	°K	0	0	t14	min	0	0
r61	flag	100	100	t15	min	0	0
r62	°K	2	2	t16	min	0	0
r63	min	0	0	t07	ore	0	0
A03	min	45	45	t08	min	0	0
A04	min	60	60	t45	giorni	0	0
A12	min	90	90	t46	mesi	1	1
A13	°C	-8	-8	t47	anni	1	1
A14	°C	-25	-25	o01	sec	0	0
A20	°C	8	8	o02	flag	5	5
A21	°C	-30	-30	o03	flag	0	0
A22	°C	8	8	o04	flag	0	0
A23	°C	-30	-30	o05	flag	0	0
A24	°C	8	8	o06	flag	0	0
A25	°C	-30	-30	o16	min	0	0
A26	min	240	240	o17	flag	20	20
A27	min	30	30	o20	bar	0	0
A28	min	30	30	o21	bar	-1	-1
A36	flag	0	0	o30	flag	12	59
A52	min	90	90	o37	flag	HFC	28=CO2
c01	min	0	0	o38	flag	0	0
c02	min	0	0	o39	flag	1	1
c05	sec	5	5	o41	flag	0	0
d01	flag	1(EL)	1(EL)	o42	flag	100	100
d02	°C	2	2	o43	min	100	100
d03	ore	6	6	o46	flag	10	10
d04	min	30	30	o61	flag	0	0
d05	min	0	0	o62	flag	1	1
d06	min	1	1	o64	flag	0	0
d07	min	0	0	o65	flag	0	0
d08	°C	-50	-50	o66	flag	---	---
d09	flag	1	1	o67	flag	---	---
d10	flag	1	1	o84	flag	0	0
d16	min	0	0	o85	flag	0	0
d17	min	0	0	o86	°C	0	0
d18	ore	0	0	o87	°C	8	8
d20	min	30	30	o88	flag	17	17
d21	flag	0	0	o89	min	30	30
n09	°C	5	5	o90	flag	30	30
n10	°C	3	3	o92	flag	1	1

13. DISPOSAL (SPECIALIST TECHNICIAN)

All countries have different legislations; therefore, the specific prescriptions enforced by the legislation and local authorities of the country where the equipment is demolished must be observed.
A general rule is to hand over the equipment to specialized collection/demolition centres.
Disassemble the equipment and divide the components separately according to their chemical characteristics.
The equipment components are categorized as urban waste.
Disassembly operations must be performed by qualified staff.
The materials used to construct the cabinet are:

- Iron tube: transport bars.
- aluminium tube: frame.
- galvanized sheet metal: closing panels.
- stainless steel: internal parts of the cabinet.
- polyurethane foam (thermal insulation)
- copper: fridge circuit.
- PVC: various plastic materials.
- tempered glass: front glass.

The components of the refrigeration circuit must not be cut and/or separated, but transferred whole to specialist centres for the recycling of refrigerant gas.

NOTICE

This equipment is subject to the obligations declared in Leg. Dec. 151 of 25 July 2005, Implementation of Directives 2002/95/CE, 2002/96/CE and 2003/108/CE, relating to the reduction in the use of hazardous substances in electrical and electronic equipment, as well as the disposal of waste "only if at the moment of purchase it is equipped with an incorporated Condensing Unit.

Upon the purchase of a new product, the manufacturer is obliged to dispose of an equivalent product (the equipment is equivalent when the weight of the equipment that has been withdrawn is not more than double the weight of the equipment handed over). The rates for any additional components to dispose of or excess in the weight of non-equivalent equipment will be agreed each time.
Pursuant to art.13 of the aforementioned decree, the symbol of the crossed-out wheeled bin on the equipment or on the package indicates that at the end of its useful life the product must be collected separately from other waste.
The separate collection of the equipment (if subjected to the obligations of the directive) which has reached the end of its life is organized and managed by the manufacturer. The user who wants to dispose of this equipment is required to contact
COSTAN on 0429-707311 and follow the system that the company has put in place to allow the separate collection of the equipment which has reached the end of its life.

Adequate separate collection so that the disused equipment can subsequently be recycled, treated and disposed of in a way that is environmentally-friendly contributes to avoiding possible adverse effects on the environment and on health and encourages the reuse and/or recycling of the materials which the equipment is made of.
Abusive disposal of the product by the holder will result in the application of administrative penalties as provided for by the legislation in force.
The information on materials used for the production of the equipment can be requested from COSTAN.

Rohs Declaration
The undersigned COSTAN with registered office in Solesino Viale delle Industrie n , Padova, Italy declares under its full responsibility that the object of this manual, namely the refrigerated cabinet equipped with incorporated refrigeration unit, satisfies the requirements of directive 2002/95/CE (RoHS). Any presence of lead, mercury, cadmium, hexavalent chromium, biphenyl, polybrominated biphenyls (PBB) and polybrominated diphenyl ether (PBDE) in the materials used to manufacture the equipment does not reach a weight of 0.1%; the content of cadmium does not reach a weight of 0.01%.

COSTAN
epta refrigeration

www.costan.com

Epta
Advanced Solutions
for your Store

EUROVENT CERTIFIED PERFORMANCE
www.eurovent-certification.com

Epta S.p.A. participates in the ECC programme for:
Refrigerated display cabinets (RDC); Check ongoing validity
of certificate online: www.eurovent-certification.com
or using: www.certiflash.com

TÜV AUSTRIA CERTIFIED
EN ISO 9001 20 100 52000877
EN ISO 14001 20 104 141373322
OHSAS 18001 20 116 141373323

CE